Enterprise Real-Time Attendance & Occupancy Tracking System

Software Requirements Specification (SRS)

Document Type	Software Requirements Specification (IEEE 830)
Version	1.0
Date	April 5, 2026
Status	Draft

Table of Contents

1. Introduction

2. Overall Description

3. Functional Requirements

4. Non-Functional Requirements

5. System Features Detail

6. Data Requirements

7. Appendices

1. Introduction

1.1 Purpose

This document specifies the software requirements for the **Enterprise Real-Time Attendance & Occupancy Tracking System (ERAOTS)**. It serves as a comprehensive reference for the development team and stakeholders, defining all functional and non-functional requirements, system constraints, and data models.

This SRS targets the following audiences:

- Development team (11 members across 4 squads)
- Company stakeholders and evaluators
- QA/testing personnel

1.2 Scope

ERAOTS is a full-stack web application that transforms raw biometric door-access events into actionable workforce intelligence. The system moves beyond traditional "clock-in/clock-out" attendance by providing:

- **Real-time occupancy visibility** — Know who is in the building right now
- **Intelligent attendance analytics** — Automated work-hour calculations with break detection
- **Proactive alerting** — Notifications for anomalies, late arrivals, and emergencies
- **Self-service capabilities** — Employees manage their own attendance records
- **Emergency readiness** — Instant headcount for evacuations

In Scope:

- Single-level office with scalable entry points (initially 2 doors)
- Responsive web application (desktop, tablet, mobile)
- Biometric scanner hardware simulation for development/demo
- Email, in-app, and WhatsApp (high-priority) notifications
- Export to CSV, PDF, and Excel formats

Out of Scope:

- Multi-building or multi-floor tracking
- Native mobile applications (iOS/Android)
- Third-party HR/payroll system integration
- Actual biometric hardware procurement

1.3 Definitions, Acronyms, and Abbreviations

Term	Definition
ERAOTS	Enterprise Real-Time Attendance & Occupancy Tracking System
Scan Event	A single fingerprint scan at a door scanner, generating an IN or OUT log
Smart Toggle	Logic that determines scan direction (IN/OUT) based on the employee's previous state
Occupancy	The count of employees currently physically inside the workspace
Active Duration	Total time an employee spent inside the workspace, excluding short breaks
Grace Period	Configurable window after shift start where arrival is not marked "late"
RBAC	Role-Based Access Control
JWT	JSON Web Token — used for API authentication
WebSocket	Protocol enabling real-time bidirectional communication between client and server
REST API	Representational State Transfer Application Programming Interface
ORM	Object-Relational Mapping — maps database tables to code objects

1.4 References

- IEEE 830-1998: Recommended Practice for Software Requirements Specifications

- Project Assessment Brief: "Enterprise Attendance & Occupancy Tracking System"

- GDPR Article 9 — Processing of Special Categories of Personal Data (biometric)

1.5 Document Overview

Section 2 provides a high-level system overview. Section 3 details all functional requirements. Section 4 covers non-functional requirements. Section 5 expands system feature logic. Section 6 defines data models and the ER diagram.

2. Overall Description

2.1 Product Perspective

ERAOTS is a standalone, self-contained system. It receives input from biometric door scanners (simulated during development) and presents information through a responsive web interface.

System Context Diagram:

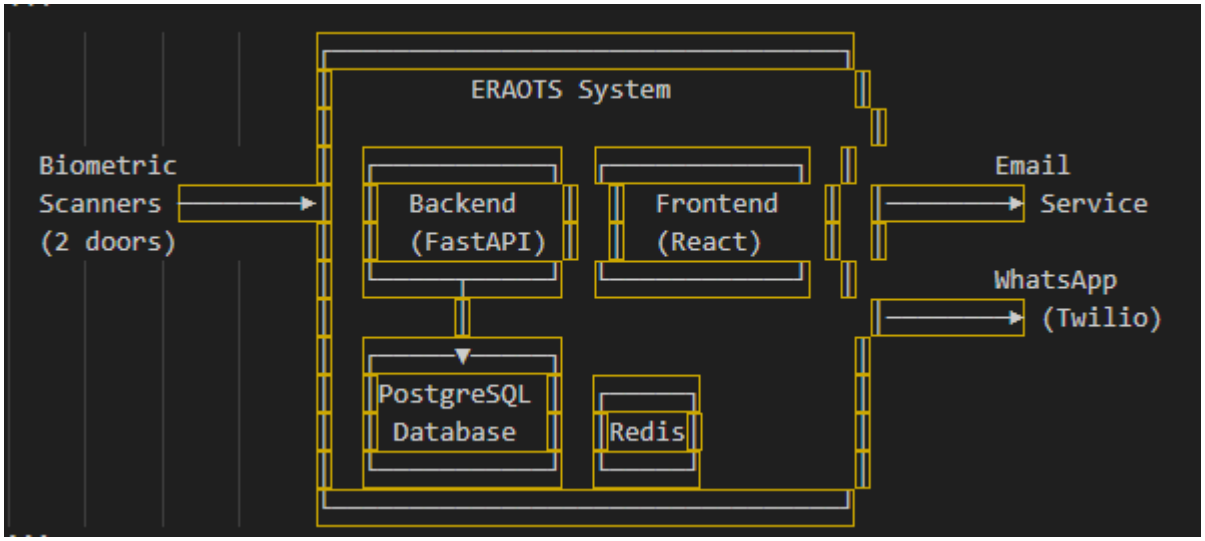

2.2 Product Functions (Summary)

ID	Function	Category
FR1	Biometric Event Listener	Core
FR2	Real-Time Occupancy Engine	Core
FR3	Live Dashboard	Core
FR4	Attendance Reporting	Core
FR5	Admin Control Panel	Core
FR6	Notification & Alert Engine	Enhanced
FR7	Leave & Schedule Management	Enhanced
FR8	Emergency Evacuation Mode	Enhanced
FR9	Employee Self-Service Portal	Enhanced
FR10	Analytics & AI Insights	Innovation
FR11	Hardware Health Monitoring	Operational
FR12	Attendance Correction Workflow	Enhanced
FR13	Configurable Policy Engine	Enhanced

2.3 User Characteristics

Role	Description	Technical Level
Super Admin	IT staff configuring the system, managing hardware, and system policies	High
HR Manager	HR personnel accessing reports, approving corrections, managing schedules	Low-Medium
Employee	Regular staff viewing personal attendance and submitting requests	Low

2.4 Constraints

- **Platform:** Responsive web application — must function on Chrome, Firefox, Safari, Edge
- **Tech Stack:** Python (FastAPI) backend, React (Vite) frontend, PostgreSQL database, Redis cache
- **Hardware:** Biometric scanners are simulated; API contract is designed for real hardware integration
- **Timeline:** 3-week development cycle
- **Team:** 11 first-year university students using AI-assisted development (vibe coding)
- **Budget:** Zero — all tools must be free/open-source or have free tiers

2.5 Assumptions and Dependencies

- The office has a single level with 2 entry/exit points (scalable to N doors)
- Each employee has a unique fingerprint ID registered in the system
- Scanners are placed at doorways and capture scans for both entry and exit
- Internet connectivity is available for notifications (email, WhatsApp)
- The system operates in a single timezone
- Development uses a hardware simulator that mirrors real scanner API contracts

3. Functional Requirements

1. FR1: Biometric Event Listener

Priority	Critical
Description	A service that receives, validates, and persists raw scan events from biometric door hardware.

Requirements:

ID	Requirement
FR1.1	The system SHALL accept scan events via a REST endpoint (POST /api/events/scan) containing scanner_id, fingerprint_id, and timestamp
FR1.2	The system SHALL validate that the fingerprint_id exists in the employee registry
FR1.3	The system SHALL reject and log events from unregistered fingerprint IDs as "unauthorized access attempts"
FR1.4	The system SHALL persist every valid scan event as an immutable record with a server-generated UUID
FR1.5	The system SHALL support receiving events from multiple scanners simultaneously without data loss
FR1.6	The system SHALL buffer incoming events when the database is temporarily unavailable and retry persistence upon recovery
FR1.7	The system SHALL detect and flag duplicate scans (same employee, same scanner, within 10 seconds)

2. FR2: Real-Time Occupancy Engine

Priority	Critical
Description	A logic layer that determines each employee's current presence state based on sequential scan events.

Requirements:

ID	Requirement
FR2.1	The system SHALL implement Smart Toggle logic: if an employee's last known state is OUT, the next scan is IN, and vice versa
FR2.2	The system SHALL maintain a real-time state for each employee: ACTIVE (inside), ON_BREAK (outside < 30 min), AWAY (outside > 30 min), or OUTSIDE (not in building)
FR2.3	The system SHALL automatically transition an employee from ON_BREAK to AWAY after 30 minutes of being outside (configurable via FR13)
FR2.4	The system SHALL calculate and cache the total occupancy count in real-time
FR2.5	The system SHALL handle edge cases: missed scans (see FR12), double scans (FR1.7), and end-of-day auto-checkout
FR2.6	The system SHALL perform an automatic end-of-day checkout at a configurable time (default: 11:59 PM) for any employee still showing as ACTIVE

3. FR3: Live Dashboard

Priority	Critical
Description	A high-visibility, real-time web interface showing current office occupancy and activity.

Requirements:

ID	Requirement
FR3.1	The dashboard SHALL display the current total occupancy count and percentage of capacity
FR3.2	The dashboard SHALL show a live feed of the most recent entry/exit events (last 50)
FR3.3	The dashboard SHALL update in real-time via WebSocket — no manual refresh required
FR3.4	The dashboard SHALL display employee status breakdown: count of ACTIVE, ON_BREAK, AWAY
FR3.5	The dashboard SHALL provide a searchable employee list with current status indicators (color-coded)
FR3.6	The dashboard SHALL display per-door activity (entries/exits per scanner)
FR3.7	The dashboard SHALL be responsive — usable on desktop (1920px), tablet (768px), and mobile (375px)
FR3.8	The dashboard SHALL support a Wall Display Mode (kiosk) — simplified, large-font view for lobby screens

4. FR4: Attendance Reporting

Priority	Critical
Description	Automated calculation and generation of attendance reports.

Requirements:

ID	Requirement
FR4.1	The system SHALL calculate daily metrics per employee: first entry, last exit, total time in building, total active time (excluding breaks), break count, total break duration
FR4.2	The system SHALL flag late arrivals based on the employee's assigned schedule and grace period policy
FR4.3	The system SHALL calculate overtime as any active time beyond the scheduled shift end
FR4.4	The system SHALL differentiate "Time in Building" (total) vs "Time at Desk" (active only)
FR4.5	The system SHALL generate monthly attendance summaries with: days present, days absent, days late, total hours worked, average daily hours, overtime hours
FR4.6	The system SHALL allow reports to be filtered by: date range, department, individual employee
FR4.7	The system SHALL export reports in the user's chosen format: CSV, PDF, or Excel
FR4.8	The system SHALL allow comparison of actual attendance against scheduled hours

5. FR5: Admin Control Panel

Priority	Critical
Description	Management interface for system configuration, employee profiles, and access control.

Requirements:

ID	Requirement
FR5.1	Admins SHALL be able to CRUD employee profiles including: name, email, phone, department, fingerprint ID, role
FR5.2	Admins SHALL be able to manage departments (create, rename, assign manager, deactivate)
FR5.3	Admins SHALL be able to register/deregister biometric scanners and assign them to doors
FR5.4	Admins SHALL be able to assign roles (Super Admin, HR Manager, Employee) with corresponding permissions
FR5.5	Admins SHALL be able to view a complete audit log of all administrative actions
FR5.6	The admin panel SHALL provide bulk employee import via CSV upload
FR5.7	Admins SHALL be able to configure system-wide settings: office capacity, timezone, auto-checkout time

6. FR6: Notification & Alert Engine

Priority	High
Description	Multi-channel notification system for proactive monitoring and alerts.

Requirements:

ID	Requirement
FR6.1	The system SHALL support three notification channels: in-app (WebSocket), email (SMTP), and WhatsApp (Twilio API, high-priority only)
FR6.2	The system SHALL send in-app notifications for all alert types in real-time
FR6.3	The system SHALL send email notifications for: daily attendance digests, correction request updates, weekly summaries
FR6.4	The system SHALL send WhatsApp notifications ONLY for critical alerts: emergency evacuations, unauthorized access attempts, scanner hardware failures
FR6.5	The system SHALL allow users to configure their notification preferences (opt-in/opt-out per channel)
FR6.6	The system SHALL categorize alerts by priority: LOW, MEDIUM, HIGH, CRITICAL
FR6.7	The system SHALL generate alerts for: late arrivals (after grace), unauthorized scans, anomalous scan patterns, approaching office capacity
FR6.8	The system SHALL maintain a notification history accessible to each user
FR6.9	Notifications SHALL be sent asynchronously via background workers (Celery) to avoid blocking the main API

7. FR7: Leave & Schedule Management

Priority	High
Description	Module for defining work schedules, managing leave requests, and reconciling attendance against expected hours.

Requirements:

ID	Requirement
FR7.1	The system SHALL support defining named schedules (e.g., "Standard 9-5", "Early Shift 7-3") with start time, end time, and grace period
FR7.2	The system SHALL allow assigning schedules at the department level (default) or individual employee level (override)
FR7.3	The system SHALL support leave types: Annual Leave, Sick Leave, Work From Home (WFH), Half Day, and custom types
FR7.4	Employees SHALL be able to submit leave requests with: type, date range, and reason
FR7.5	HR Managers SHALL be able to approve or reject leave requests with optional comments
FR7.6	The system SHALL auto-reconcile daily attendance against the assigned schedule — flagging discrepancies
FR7.7	The system SHALL maintain a company holiday calendar configurable by admins
FR7.8	The system SHALL display a team calendar view showing leave schedules and attendance patterns

8. FR8: Emergency Evacuation Mode

Priority	High
Description	One-click emergency activation providing instant headcount for safety and compliance.

Requirements:

ID	Requirement
FR8.1	Super Admins and HR Managers SHALL be able to activate Emergency Mode via a prominent button on the dashboard
FR8.2	Upon activation, the system SHALL instantly generate a list of all employees currently inside the building (status = ACTIVE or ON_BREAK)
FR8.3	The system SHALL display the headcount in a dedicated emergency view with: total inside, list of names, department, last known door
FR8.4	The system SHALL send CRITICAL-priority WhatsApp notifications to all employees currently marked as inside
FR8.5	The emergency view SHALL provide a checkbox for each employee to mark them as "accounted for" during the evacuation
FR8.6	The system SHALL log the emergency event with: activation time, activating user, headcount snapshot, and deactivation time
FR8.7	The system SHALL support emergency types: Fire, Drill, Security Threat, Other
FR8.8	The emergency report SHALL be exportable as PDF for emergency services records

9. FR9: Employee Self-Service Portal

Priority	High
Description	Personal dashboard for employees to view their own attendance data and submit requests.

Requirements:

ID	Requirement
FR9.1	Employees SHALL be able to view their personal attendance history with daily breakdown
FR9.2	Employees SHALL see their "Time at Desk" vs "Time in Building" visualized as charts
FR9.3	Employees SHALL be able to submit scan correction requests when they missed a scan (see FR12)
FR9.4	Employees SHALL be able to view and submit leave requests
FR9.5	Employees SHALL see a personal analytics summary: average arrival time, punctuality rate, monthly trend
FR9.6	Employees SHALL see their current status (ACTIVE/ON_BREAK/AWAY/OUTSIDE) and today's scan timeline

ID	Requirement
FR9.7	Employees SHALL receive in-app notifications for correction request status updates and leave approvals

10. FR10: Analytics & AI Insights

Priority	Medium
Description	Data-driven analytics using statistical analysis for workforce insights.

Requirements:

ID	Requirement
FR10.1	The system SHALL generate a peak hours heatmap visualizing entry/exit frequency by hour and day of week
FR10.2	The system SHALL provide late-coming trend alerts — flagging employees with 3+ late arrivals in a rolling 7-day window
FR10.3	The system SHALL provide occupancy forecasting — predicting expected occupancy for each hour based on 30-day historical averages
FR10.4	The system SHALL display department-wise attendance comparison charts
FR10.5	The system SHALL detect and flag anomalous patterns: scans at unusual hours, sudden attendance drops, repeated missed scans
FR10.6	The system SHALL provide a punctuality score per employee (0-100) based on: on-time arrivals, break discipline, and consistency
FR10.7	Analytics SHALL be accessible to HR Managers and Super Admins; employees see only their personal analytics

11. FR11: Hardware Health Monitoring

Priority	Medium
Description	Real-time monitoring of biometric scanner health and connectivity.

Requirements:

ID	Requirement
FR11.1	Each scanner SHALL send periodic heartbeat signals to the system (configurable interval, default: 60 seconds)
FR11.2	The system SHALL track scanner status: ONLINE, OFFLINE, DEGRADED
FR11.3	The system SHALL alert admins when a scanner goes OFFLINE (no heartbeat for 3x interval)
FR11.4	The system SHALL display a hardware status dashboard showing all scanners with: status, last heartbeat, event count today, error rate
FR11.5	The system SHALL log all scanner status changes for historical analysis
FR11.6	When a scanner recovers from OFFLINE, the system SHALL process any buffered events in chronological order

12. FR12: Attendance Correction Workflow

Priority	High
Description	Process for employees to request corrections for missed or erroneous scan events.

Requirements:

ID	Requirement
FR12.1	Employees SHALL be able to submit correction requests specifying: date, correction type (missed scan, wrong scan, other), proposed time, and reason
FR12.2	Correction requests SHALL follow an approval chain: Employee → Manager → HR (configurable)
FR12.3	HR Managers SHALL see a queue of pending correction requests with one-click approve/reject
FR12.4	Approved corrections SHALL create a new scan event marked as MANUAL_CORRECTION (distinguishable from hardware scans)
FR12.5	The system SHALL maintain a full audit trail for every correction: who requested, who approved, original vs corrected values
FR12.6	The system SHALL recalculate attendance records automatically after a correction is approved
FR12.7	The system SHALL limit correction requests to events within the last 7 days (configurable via FR13)

13. FR13: Configurable Policy Engine

Priority	Medium
Description	Rule-based configuration system allowing flexible, department-specific attendance policies.

Requirements:

ID	Requirement
FR13.1	The system SHALL support configurable policies for: grace period (default: 15 min), maximum break duration (default: 30 min), overtime threshold, half-day rules, correction request window
FR13.2	Policies SHALL be applicable at two levels: company-wide (default) and department-specific (override)
FR13.3	Department-specific policies SHALL override company-wide policies for employees in that department
FR13.4	Admins SHALL be able to create, modify, activate, and deactivate policies via the admin panel
FR13.5	Policy changes SHALL be logged in the audit trail with effective date
FR13.6	The system SHALL apply policies retroactively when recalculating attendance only if explicitly requested by admin

4. Non-Functional Requirements

1. NFR1: Reliability (Original)

ID	Requirement
NFR1.1	The system SHALL buffer scan events locally when the database is temporarily unavailable
NFR1.2	Buffered events SHALL be automatically processed in chronological order upon recovery
NFR1.3	The system SHALL guarantee zero data loss for scan events under all failure scenarios

2. NFR2: Auditability (Original)

ID	Requirement
NFR2.1	Every scan event SHALL be timestamped with server time (UTC) and stored immutably
NFR2.2	Scan event records SHALL NOT be editable or deletable — corrections create new records referencing originals
NFR2.3	All administrative actions SHALL be logged with: user, action, timestamp, old value, new value

3. NFR3: Concurrency (Original)

ID	Requirement
NFR3.1	The system SHALL handle simultaneous scan events from all registered scanners without race conditions
NFR3.2	The system SHALL use database-level locking or atomic operations to prevent state corruption during concurrent updates

4. NFR4: Data Privacy & Compliance

ID	Requirement
NFR4.1	All biometric identifiers (fingerprint IDs) SHALL be stored as hashed values, never in plaintext
NFR4.2	All data in transit SHALL use TLS 1.2+ encryption (HTTPS)
NFR4.3	All sensitive data at rest SHALL be encrypted using AES-256
NFR4.4	The system SHALL support configurable data retention policies (auto-purge scan logs older than N months)
NFR4.5	Employee biometric data SHALL be deletable upon request (right to erasure)
NFR4.6	Access to personal attendance data SHALL be restricted to: the employee themselves, their manager, and HR

5. NFR5: Performance & Scalability

ID	Requirement
NFR5.1	The live dashboard SHALL load within 2 seconds under normal operating conditions
NFR5.2	API endpoints SHALL respond within 500ms for standard CRUD operations
NFR5.3	Scan event processing (from receipt to dashboard update) SHALL complete within 1 second
NFR5.4	The system SHALL support up to 500 concurrent users without performance degradation
NFR5.5	The architecture SHALL support horizontal scaling by adding additional API server instances behind a load balancer
NFR5.6	Frequently accessed data (occupancy count, employee states) SHALL be cached in Redis with < 100ms read time

6. NFR6: Security

ID	Requirement
NFR6.1	The system SHALL implement Role-Based Access Control (RBAC) with three roles: Super Admin, HR Manager, Employee
NFR6.2	Authentication SHALL use JWT tokens with configurable expiry (default: 8 hours)
NFR6.3	Super Admin accounts SHALL require Multi-Factor Authentication (MFA)
NFR6.4	User sessions SHALL auto-expire after 30 minutes of inactivity
NFR6.5	The API SHALL implement rate limiting (100 requests/minute per user for standard endpoints)
NFR6.6	Passwords SHALL be hashed using bcrypt with a minimum cost factor of 12
NFR6.7	The scanner event endpoint SHALL authenticate using API keys specific to each registered scanner

7. NFR7: Availability & Disaster Recovery

ID	Requirement
NFR7.1	The system SHALL target 99.5% uptime during business hours (8 AM - 8 PM)
NFR7.2	Database backups SHALL run automatically every 6 hours with point-in-time recovery capability
NFR7.3	The system SHALL degrade gracefully — continue buffering scan events even if the dashboard or reporting modules fail
NFR7.4	Critical system errors SHALL trigger automated alerts to Super Admins via email and WhatsApp

8. NFR8: Maintainability

ID	Requirement
NFR7.1	The codebase SHALL follow a modular architecture with clear separation: API layer, service/business logic layer, data access layer
NFR7.2	All API endpoints SHALL be documented using OpenAPI/Swagger (auto-generated by FastAPI)
NFR7.3	The system SHALL use database migrations (Alembic) for all schema changes
NFR7.4	All modules SHALL include logging with correlation IDs for request tracing
NFR7.5	The project SHALL include a README with setup instructions reproducible by any developer

9. NFR9: Testability

ID	Requirement
NFR8.1	All business logic modules SHALL have minimum 80% unit test coverage
NFR8.2	Integration tests SHALL cover all critical API endpoints with both valid and invalid inputs
NFR8.3	The hardware simulator SHALL support automated test scenarios: normal flow, missed scans, double scans, concurrent scans, scanner failure
NFR8.4	Load testing SHALL be documented with benchmarks for the concurrency requirements

5. System Features Detail

5.1 Smart Toggle Logic

When a single scanner serves both entry and exit:

State Machine:

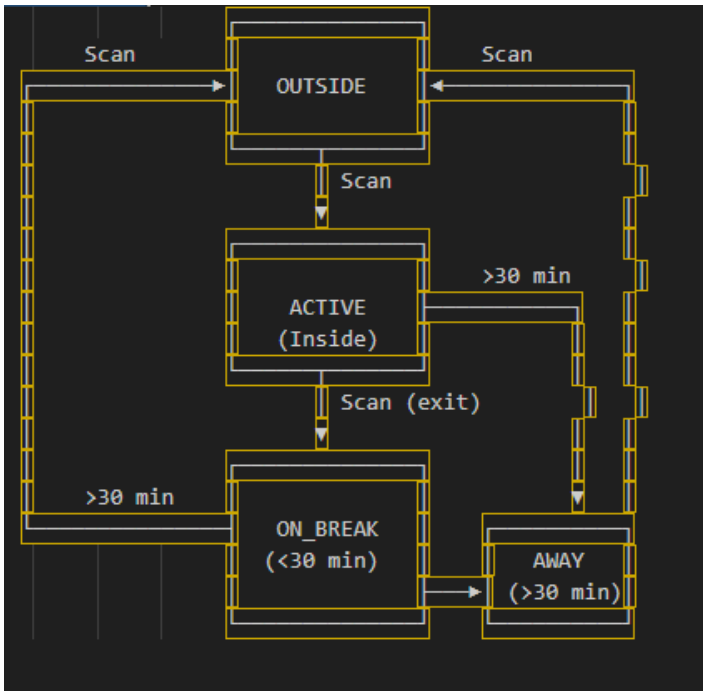

Edge Case Handling:

Scenario	System Response
Double scan (< 10 sec)	Ignore second scan, log as duplicate
Missed exit scan	End-of-day auto-checkout; flagged for FR12 correction
Scan at unregistered scanner	Reject, log as unauthorized, trigger FR6 alert
Two employees scan simultaneously at different doors	Process independently — atomic operations per employee (NFR3)

5.2 Active Duration Calculation

- Total Time in Building = Last Exit - First Entry
- Break Time = Sum of all (Re-entry - Exit) where duration < break_threshold
- Active Duration = Total Time in Building - Break Time
- Overtime = max(0, Active Duration - Scheduled Hours)

5.3 Notification Priority Matrix

Event	Priority	Channels
Emergency evacuation	CRITICAL	In-App + Email + WhatsApp
Unauthorized access	CRITICAL	In-App + WhatsApp
Scanner offline	HIGH	In-App + Email
Employee absent without notice	HIGH	In-App + Email
Late arrival	MEDIUM	In-App
Correction request update	MEDIUM	In-App + Email
Daily attendance digest	LOW	Email
Weekly summary	LOW	Email

5.4 Role Permission Matrix

Feature	Super Admin	HR Manager	Employee
View live dashboard	Yes	Yes	Yes (limited)
View all employee attendance	Yes	Yes	No
View own attendance	Yes	Yes	Yes
Generate reports	Yes	Yes	No
Export reports	Yes	Yes	No
Manage employees	Yes	No	No
Manage scanners	Yes	No	No
Manage schedules	Yes	Yes	No
Approve leave requests	No	Yes	No
Submit leave requests	Yes	Yes	Yes
Approve corrections	No	Yes	No
Submit corrections	Yes	Yes	Yes
Configure policies	Yes	No	No
Activate emergency mode	Yes	Yes	No
View analytics	Yes	Yes	Own only
View hardware status	Yes	No	No
View audit logs	Yes	No	No

6. Data Requirements

The complete Entity-Relationship diagram is provided in the companion document: **"ER_Diagram.pdf"**

6.1 Data Dictionary (Key Entities)

Entity	Description	Estimated Volume
Employee	Staff profiles with biometric IDs	100–500 records
Department	Organizational units	5–20 records
Scanner	Biometric door hardware	2–10 records
ScanEvent	Immutable raw scan logs	~1,000/day (growing)
OccupancyState	Current live state per employee	1 per employee (real-time)
AttendanceRecord	Processed daily attendance	1 per employee per day
Schedule	Work shift definitions	5–10 records
LeaveRequest	Employee leave submissions	~50/month
Notification	All sent alerts	~500/day
CorrectionRequest	Scan correction submissions	~20/month
Policy	Configurable business rules	10–30 records
EmergencyEvent	Evacuation activations	Rare (~1/quarter)
AuditLog	All system actions	~200/day (growing)

7. Appendices

7.1 Technology Stack

Layer	Technology	Version
Backend Framework	Python + FastAPI	Python 3.11+, FastAPI 0.100+
ORM	SQLAlchemy	2.0+
Migrations	Alembic	Latest
Database	PostgreSQL	15+
Cache / Queue	Redis	7+
Task Queue	Celery	5+
Frontend Framework	React	18+
Frontend Build	Vite	5+
Charts	Recharts	Latest
HTTP Client	Axios	Latest
Authentication	JWT (PyJWT)	Latest
Email	SMTP / SendGrid	Free tier
WhatsApp	Twilio API	Sandbox
PDF Export	ReportLab / WeasyPrint	Latest
Excel Export	openpyxl	Latest
Testing	pytest + React Testing Library	Latest
API Docs	Swagger UI (auto by FastAPI)	Built-in
Version Control	Git + GitHub	Latest

7.2 Glossary

Term	Definition
Vibe Coding	AI-assisted software development where developers use AI tools to generate, debug, and refine code
Heartbeat	Periodic signal from hardware indicating it is online and functioning
Smart Toggle	Algorithm that determines scan direction by inverting the employee's previous known state
Grace Period	Buffer time after scheduled start allowing arrival without "late" flag
Atomic Operation	Database operation that completes fully or not at all, preventing partial updates

7.3 Revision History

Version	Date	Author	Changes
1.0	April 5, 2026	Development Team	Initial SRS creation